







YUSHII

Hue

Images for illustrative purposes only.

The YUSHI Hue range

Crafted with clean cylindrical lines and ergonomic pin-lever handles, the Hue tapware collection delivers modern minimalism and precise control across your kitchen and bathroom, blending effortless functionality with cohesive contemporary design.

Features

- One universal body, compatible with all three finishes: Chrome, Matte Black and Brushed Nickel
- Made from top quality Lead-Free brass
- Warranty: 15 years mixer PEX connection hose replacement; 7 years replacement cartridge or parts; 1 year parts and labour

Universal Body



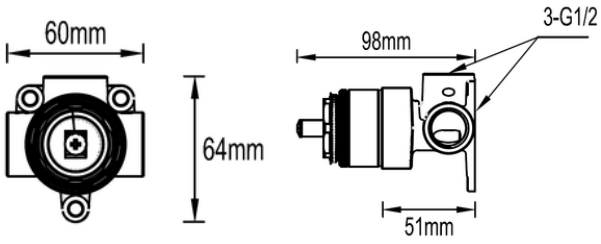

YS50100 (Universal Basic Set)

Wall Mixer Finish Set



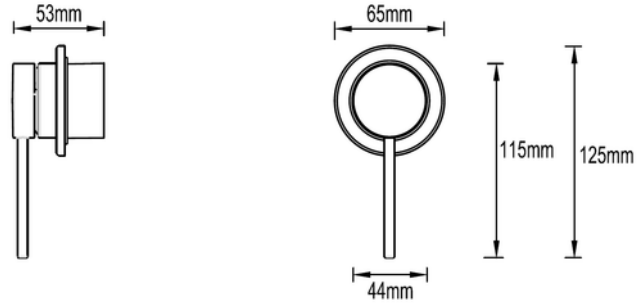

YS50215 (Chrome)
YS50216 (Matte Black)
YS50217 (Brushed Nickel)

Bath Spout



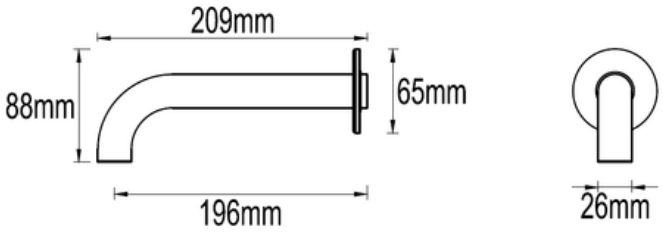

YS50220 (Chrome)
YS50221 (Matte Black)
YS50222 (Brushed Nickel)

YUSHI

Hue

Images for illustrative purposes only.

Basin Mixer



YS50210
(Chrome)

YS50211
(Matte Black)

YS50212
(Brushed Nickel)

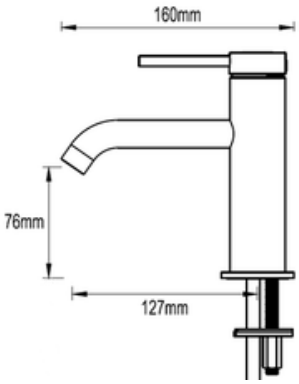

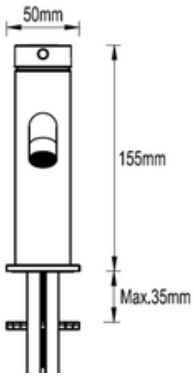

Sink Mixer



YS50200
(Chrome)

YS50201
(Matte Black)

YS50202
(Brushed Nickel)

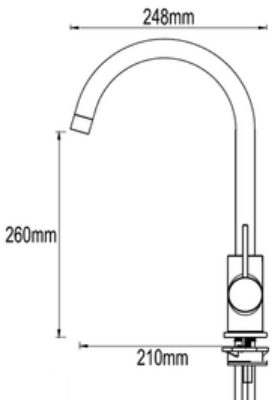

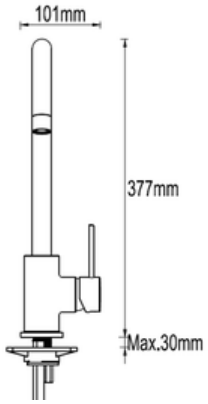

Sink Mixer with Pull-out spray



YS50205
(Chrome)

YS50206
(Matte Black)

YS50207
(Brushed Nickel)

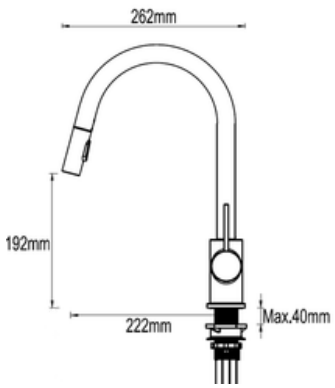

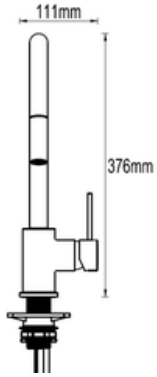

YUSHII

Hue

Images for illustrative purposes only.