STUDIO BAGNO

Edge Mk2 Round Basin – RH bowl

STYLE

Bench/Wall

CODE

NTH (EDGEMK2RR/0)
1TH (EDGEMK2RR/1)

COLOURS

White

OVERFLOW & WASTE

32 mm overflow plug & waste not included.

RECOMMENDED PLUG & WASTE

SBW003

NOTES

Not glazed at rear

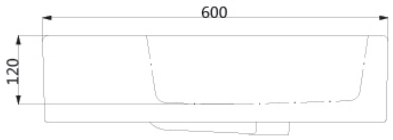

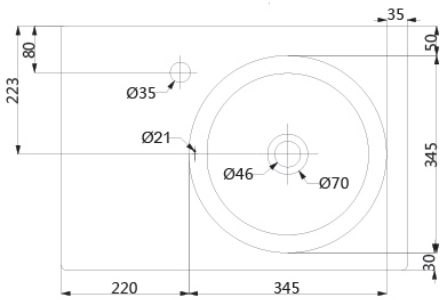

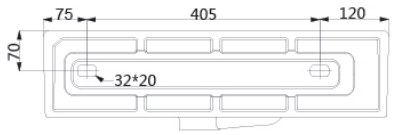

Note: All dimensions are in millimetres and are subject to normal manufacturing variances.
Studio Bagno Pty Ltd reserves the right to vary specifications at any time without notice. Date created: 07/03/2018