IMPERO 70 CONSOLE

STYLE

Console

CODE

1TH (IMP70CON/1)
3TH (IMP70CON/3)

COLOURS

White + Chrome

OVERFLOW & WASTE

32 mm nonoverflow plug & waste not included.

NOTES

Includes Impero 70 Basin

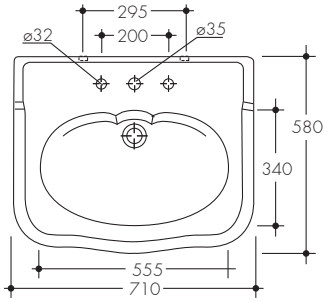

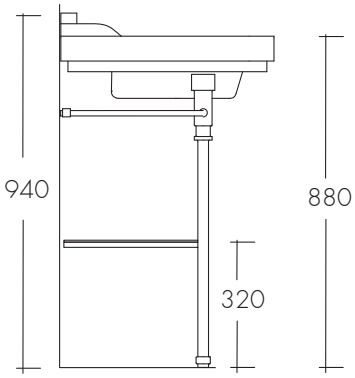

Note: All dimensions are in millimetres and are subject to normal manufacturing variances.
Studio Bagno Pty Ltd reserves the right to vary specifications at any time without notice. Date created: 25/05/2017