STUDIO BAGNO

MILADY WALL HUNG PAN

STYLE

WALL HUNG PAN (RIMLESS)

CODE

MIL003

COLOURS

White + Premium Colours

INCLUSIONS

Connector, soft close seat and fixings included.

NOTES

WELS 4-STAR RATING

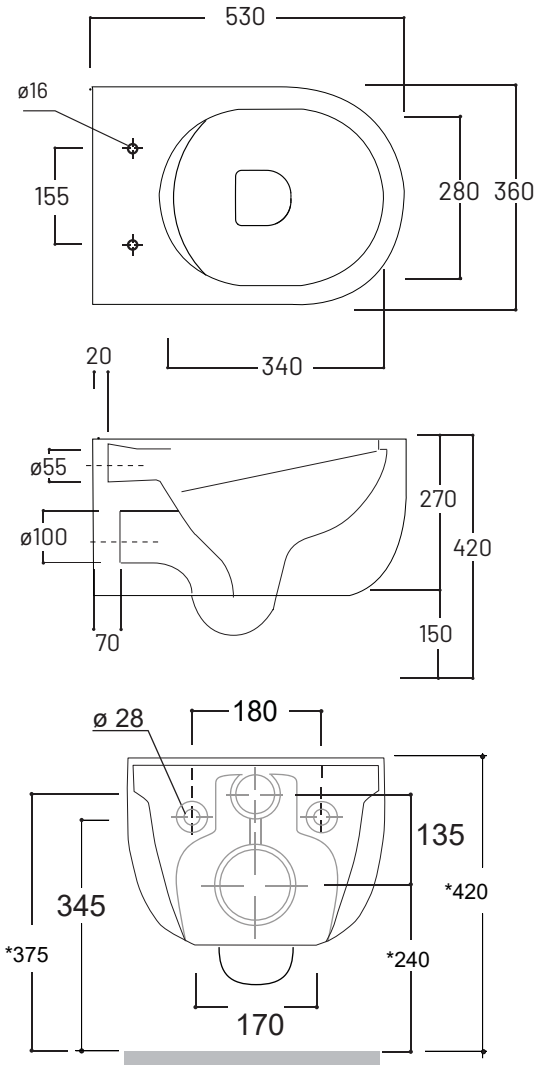

Note: All dimensions are in millimetres and are subject to normal manufacturing variances.
Studio Bagno Pty Ltd reserves the right to vary specifications at any time without notice. Date created: 22/01/2018