# APARTMENT 40R

STYLE

Bench/Wall

CODE

NTH (5001/0)
1TH (5001/1)
3TH (5001/3)

COLOURS

White

OVERFLOW & WASTE

32 mm overflow plug & waste not included.

RECOMMENDED PLUG & WASTE

SBW003

NOTES

Not glazed at rear

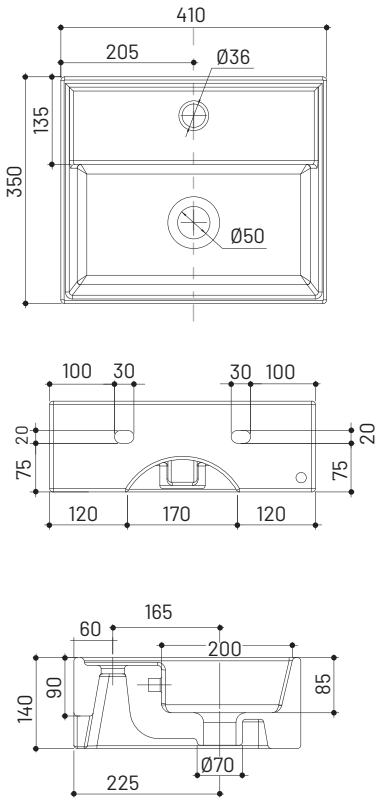


Note: All dimensions are in millimetres and are subject to nor mal manufacturing variances.
Studio Bagno Pty Ltd reserves the right to vary specifications at any time without notice. Date created: 19/03/2021