Vista 1500 BTW Freestanding Bath

Overflow

Product Image

Product Details

SKU:	**FS730115**
Brand:	Argent
Range:	Vista
Warranty:	10 Years
Product Length:	1,500 mm
Product Width:	800 mm
Product Height:	600 mm
Litre Capacity:	340 L

Additional Features

Required Product

Recommended Products

Additional Notes

* Sanitary Grade Acrylic
* Gloss Finish
* Reinforced Base Support
* Stainless Steel Adjustable Feet
* Fully Enclosed Back

Technical Specification

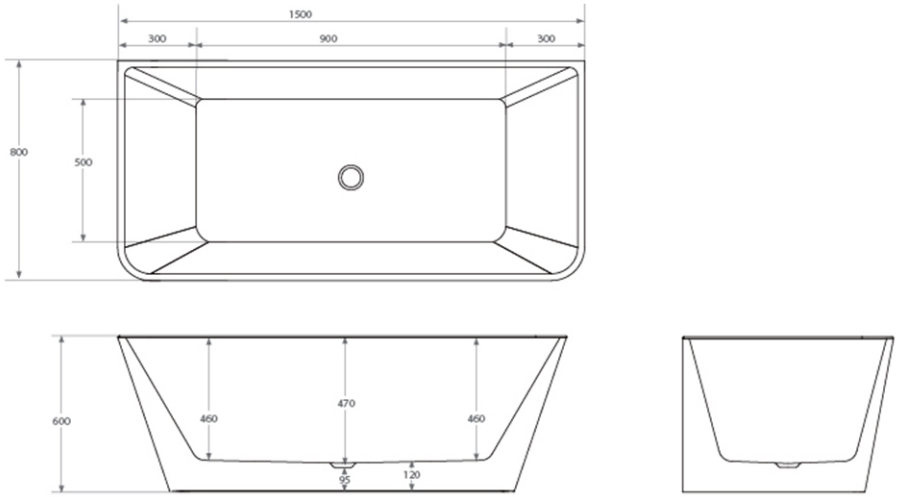

Note: All dimensions are in millimetres and are subject to normal manufacturing variations. Always use the physical product measurements for cut-outs and rough-ins as the technical details shown may differ from the actual product. Use acetic cured silicone sealant. Do not use epoxy type adhesives. Clean with damp cloth. Do not use abrasive cleaners, liquids or pastes.